UL 698A

STANDARD FOR SAFETY

Industrial Control Panels Relating to Hazardous (Classified) Locations

Document Was Downloaded By Jon Parkinson For Use By Matrix Systems LLC Parkinson, Jon : 11/10/2022 - 1:51 PM

Document Was Downloaded By Jon Parkinson For Use By Matrix Systems LLC Parkinson, Jon : 11/10/2022 - 1:51 PM

UL COPYRIGHTED MATERIAL – NOT AUTHORIZED FOR FURTHER
REPRODUCTION OR DISTRIBUTION WITHOUT PERMISSION FROM UL INC.

UL Standard for Safety for Industrial Control Panels Relating to Hazardous (Classified) Locations, UL 698A

Fourth Edition, Dated August 21, 2018

Summary of Topics

This revision of ANSI/UL 698A dated November 4, 2022 is being issued to update the title page to reflect the most recent designation as a Reaffirmed American National Standard (ANS). No technical changes have been made.

Text that has been changed in any manner or impacted by UL's electronic publishing system is marked with a vertical line in the margin.

The requirements are substantially in accordance with Proposal(s) on this subject dated September 16, 2022.

All rights reserved. No part of this publication may be reproduced, stored in a retrieval system, or transmitted in any form by any means, electronic, mechanical photocopying, recording, or otherwise without prior permission of UL.

UL provides this Standard "as is" without warranty of any kind, either expressed or implied, including but not limited to, the implied warranties of merchantability or fitness for any purpose.

In no event will UL be liable for any special, incidental, consequential, indirect or similar damages, including loss of profits, lost savings, loss of data, or any other damages arising out of the use of or the inability to use this Standard, even if UL or an authorized UL representative has been advised of the possibility of such damage. In no event shall UL's liability for any damage ever exceed the price paid for this Standard, regardless of the form of the claim.

Users of the electronic versions of UL's Standards for Safety agree to defend, indemnify, and hold UL harmless from and against any loss, expense, liability, damage, claim, or judgment (including reasonable attorney's fees) resulting from any error or deviation introduced while purchaser is storing an electronic Standard on the purchaser's computer system.

Document Was Downloaded By Jon Parkinson For Use By Matrix Systems LLC Parkinson, Jon : 11/10/2022 - 1:51 PM

UL COPYRIGHTED MATERIAL – NOT AUTHORIZED FOR FURTHER REPRODUCTION OR DISTRIBUTION WITHOUT PERMISSION FROM UL INC.

No Text on This Page

Document Was Downloaded By Jon Parkinson For Use By Matrix Systems LLC Parkinson, Jon : 11/10/2022 - 1:51 PM

UL COPYRIGHTED MATERIAL – NOT AUTHORIZED FOR FURTHER REPRODUCTION OR DISTRIBUTION WITHOUT PERMISSION FROM UL INC.

AUGUST 21, 2018
(Title Page Reprinted: November 4, 2022)

UL 698A

Standard for Industrial Control Panels Relating to Hazardous (Classified) Locations

First Edition – April, 1999
Second Edition – May, 2008
Third Edition – September, 2012

Fourth Edition

August 21, 2018

This ANSI/UL Standard for Safety consists of the Fourth Edition including revisions through November 4, 2022.

The most recent designation of ANSI/UL 698A as a Reaffirmed American National Standard (ANS) occurred on November 4, 2022. ANSI approval for a standard does not include the Cover Page, Transmittal Pages, and Title Page.

Comments or proposals for revisions on any part of the Standard may be submitted to UL at any time. Proposals should be submitted via a Proposal Request in UL's On-Line Collaborative Standards Development System (CSDS) at https://csds.ul.com.

UL's Standards for Safety are copyrighted by UL. Neither a printed nor electronic copy of a Standard should be altered in any way. All of UL's Standards and all copyrights, ownerships, and rights regarding those Standards shall remain the sole and exclusive property of UL.

COPYRIGHT © 2022 UNDERWRITERS LABORATORIES INC.

Document Was Downloaded By Jon Parkinson For Use By Matrix Systems LLC Parkinson, Jon : 11/10/2022 - 1:51 PM

UL COPYRIGHTED MATERIAL – NOT AUTHORIZED FOR FURTHER REPRODUCTION OR DISTRIBUTION WITHOUT PERMISSION FROM UL INC.

No Text on This Page

Document Was Downloaded By Jon Parkinson For Use By Matrix Systems LLC Parkinson, Jon : 11/10/2022 - 1:51 PM

UL COPYRIGHTED MATERIAL – NOT AUTHORIZED FOR FURTHER REPRODUCTION OR DISTRIBUTION WITHOUT PERMISSION FROM UL INC.

CONTENTS

INTRODUCTION

1 Scope 5
2 Undated References 6
3 Units of Measurement 6
4 Glossary 6
5 General 7

CONSTRUCTION

6 Barriers 8
7 Selection of Apparatus for Connection to Intrinsically Safe Outputs 8
7.1 General 8
7.2 Suitability of simple apparatus to be determined in the field 8
7.3 Suitability of intrinsically safe apparatus to be determined in the field 9
7.4 Suitability of simple apparatus determined at the panel manufacturer's facility 9
7.5 Intrinsically safe apparatus selected at the panel manufacturer's facility 11
8 Additional Wiring and Wiring Terminal Requirements 12
8.1 General 12
8.2 Additional field wiring terminal requirements 12
9 Separation of Circuits 13
9.1 General 13
9.2 Separation by distance 13
9.3 Separation by partitions 15
9.4 Combination of separation by partitions and separation by distance 17
10 Barrier Ground Terminal 18

PERFORMANCE

11 Mechanical Tests 18

MARKINGS

12 Internal Markings 18
13 External Markings 18

PANEL DOCUMENTATION

14 General 18
15 Panel Control Drawing 19

Document Was Downloaded By Jon Parkinson For Use By Matrix Systems LLC Parkinson, Jon : 11/10/2022 - 1:51 PM

UL COPYRIGHTED MATERIAL – NOT AUTHORIZED FOR FURTHER REPRODUCTION OR DISTRIBUTION WITHOUT PERMISSION FROM UL INC.

No Text on This Page

Document Was Downloaded By Jon Parkinson For Use By Matrix Systems LLC Parkinson, Jon : 11/10/2022 - 1:51 PM

UL COPYRIGHTED MATERIAL – NOT AUTHORIZED FOR FURTHER REPRODUCTION OR DISTRIBUTION WITHOUT PERMISSION FROM UL INC.

INTRODUCTION

1 Scope

1.1 These requirements cover industrial control panels intended for general industrial installation and use in unclassified locations with intrinsically safe circuit extensions into the following hazardous (classified) locations in accordance with the National Electrical Code (NEC), NFPA 70:

a) Class I, Division 1;

b) Class I, Zone 0 and Zone 1 AEx;

c) Class II, Division 1;

d) Class III, Division 1; and

e) Zone 20 and Zone 21 AEx.

1.2 The industrial control panels covered by these requirements may include:

a) electrical (entity) parameters, only if referenced on the control drawing for barriers that are part of the panel;

b) external interconnection to non-specific simple apparatus, identified only by generic type and not by manufacturer or model number, but only if referenced in this manner on the control drawing for barriers that are part of the panel;

c) external interconnection to specific simple apparatus and specific intrinsically safe apparatus, identified by manufacturer and model number, but only if referenced in this manner on either the control drawing for barriers that are part of the panel or on the panel control drawing;

d) fieldbus intrinsically safe concept (FISCO) applications, if referenced on the control drawing for barriers that are part of the panel; and.

e) internal interconnection of multiple barriers, only if referenced on the control drawing for the barriers that are part of the panel.

1.3 The industrial control panels covered by these requirements do not include electrostatic devices, circuits or systems, gas or vapor analysis equipment, or equipment having a process line brought into the panel.

1.4 The industrial control panels covered by these requirements are assemblies consisting of components such as motor controllers, overload relays, fused disconnect switches, and/or circuit breakers and related control devices such as pushbutton stations, selector switches, pilot lights, timers, switches, control relays and the like with associated wiring terminals. In all cases, the enclosure is provided as part of the assembly.

1.5 These requirements cover equipment for use under the following atmospheric conditions:

a) An ambient temperature not exceeding 40°C (104°F);

b) An oxygen concentration not greater than 21 percent by volume; and

c) A nominal barometric pressure of one atmosphere.

Document Was Downloaded By Jon Parkinson For Use By Matrix Systems LLC Parkinson, Jon : 11/10/2022 - 1:51 PM

UL COPYRIGHTED MATERIAL – NOT AUTHORIZED FOR FURTHER REPRODUCTION OR DISTRIBUTION WITHOUT PERMISSION FROM UL INC.

2 Undated References

2.1 Any undated reference to a code or standard appearing in the requirements of this standard shall be interpreted as referring to the latest edition of that code or standard.

ANSI/NFPA 70, *National Electrical Code®*

UL 913, Intrinsically Safe Apparatus and Associated Apparatus for Use in Class I, II, and III, Division 1, Hazardous (Classified) Locations

UL 60079-0, Explosive atmospheres – Part 0: Equipment – General requirements

UL 60079-11, Explosive Atmospheres – Part 11: Equipment Protection by Intrinsic Safety "i"

UL 60079-25, Explosive Atmospheres – Part 25: Intrinsically Safe Electrical Systems

UL 120202, Recommendations for the Preparation, Content, and Organization of Intrinsic Safety Control Drawings

3 Units of Measurement

3.1 Values stated without parentheses are the requirement. Values in parentheses are explanatory or approximate information.

4 Glossary

4.1 For the purpose of this Standard, the following definitions apply.

4.2 BARRIER – The device that provides the intrinsically safe circuit.

4.3 BARRIER CONTROL DRAWING – A drawing or other document provided by the manufacturer of each intrinsically safe barrier used in the panel that details the allowed interconnections to each barrier.

4.4 INTRINSICALLY SAFE APPARATUS – Electrical equipment in which all the circuits are intrinsically safe circuits.

4.5 INTRINSICALLY SAFE CIRCUIT – A circuit in which any spark or thermal effect, produced either normally or under specified fault conditions, is incapable of causing ignition of a mixture of flammable or combustible material in air in the mixture's most easily ignitable concentration.

4.6 INTRINSICALLY SAFE FIELD WIRING – Conductors to be installed by others to connect the intrinsically safe field wiring terminals of the industrial control panel to external simple apparatus or intrinsically safe apparatus.

4.7 INTRINSICALLY SAFE INTERNAL WIRING – The wiring between the intrinsically safe field wiring terminal blocks and the terminals on the barrier.

4.8 NON-INTRINSICALLY SAFE FIELD WIRING – Conductors to be installed by others to connect the non-intrinsically safe field wiring terminals of the industrial control panel to external sources of supply, control devices, and loads.

Document Was Downloaded By Jon Parkinson For Use By Matrix Systems LLC Parkinson, Jon : 11/10/2022 - 1:51 PM

UL COPYRIGHTED MATERIAL – NOT AUTHORIZED FOR FURTHER REPRODUCTION OR DISTRIBUTION WITHOUT PERMISSION FROM UL INC.

4.9 NON-INTRINSICALLY SAFE INTERNAL WIRING – The wiring between the non-intrinsically safe field wiring terminal blocks and all non-intrinsically safe wiring, circuits and terminals, including the non-intrinsically safe terminals on the barriers.

4.10 PANEL CONTROL DRAWING – A drawing or other document provided by the manufacturer of the panel that details each barrier within the panel and the connections to simple apparatus or intrinsically safe apparatus in the field.

4.11 PARTITION – A metallic or non-metallic material used to maintain required separation between intrinsically safe and non-intrinsically safe equipment and wiring.

4.12 SIMPLE APPARATUS – An electrical component or combination of components of simple construction with well-defined electrical parameters that does not generate more than 1.5 volts, 0.1 amperes, and 25 milliwatts or a passive component that does not dissipate more than 1.3 watts and is compatible with the intrinsic safety of the circuit in which it is used.

NOTE 1 Examples of simple apparatus include passive components such as LED's pilot lights, resistors, RTD's, junction boxes, and electromechnical switches and sources of generated energy such as thermocouples and photocells which do not generate more than 1.5 volts, 0.1 amperes and 25 milliwatts.

NOTE 2 Simple apparatus in accordance with this definition intentionally excludes sources of stored energy, such as capacitors and inductors, unless identified on the barrier control drawing.

4.13 Um – The maximum voltage (rms, ac, or dc) that can be applied to a non-intrinsically safe connection facilities of the barrier without invalidating the type of protection.

5 General

5.1 The industrial control panels covered by this Standard shall be of the enclosed-type and shall comply with the applicable requirements in the Standard for Industrial Control Panels, UL 508A.

5.2 When conflicting requirements exist, the requirements of this Standard shall supersede the requirements of the Standard for Industrial Control Panels, UL 508A.

5.3 Except as indicated in 5.4, a component of a product covered by this standard shall comply with the requirements for that component.

5.4 A component is not required to comply with a specific requirement that:

a) Involves a feature or characteristic not required in the application of the component in the product covered by this standard; or

b) Is superseded by a requirement in this Standard.

5.5 A component shall be used in accordance with its rating established for the intended conditions of use.

5.6 Specific components are incomplete in construction features or restricted in performance capabilities. Such components are intended for use only under limited conditions, such as certain temperatures not exceeding specified limits, and shall be used only under those specific conditions.

Document Was Downloaded By Jon Parkinson For Use By Matrix Systems LLC Parkinson, Jon : 11/10/2022 - 1:51 PM

UL COPYRIGHTED MATERIAL – NOT AUTHORIZED FOR FURTHER REPRODUCTION OR DISTRIBUTION WITHOUT PERMISSION FROM UL INC.

CONSTRUCTION

6 Barriers

6.1 Barriers shall comply with the following requirements based on the intended area:

a) For Division 1 hazardous (classified) locations: the Standard for Intrinsically Safe Apparatus and Associated Apparatus for Use in Class I, II, and III, Division 1, Hazardous (Classified) Locations, UL 913.

b) For Zone 0 and Zone 1 AEx hazardous (classified) locations: the Standard for Explosive Atmospheres – Part 11: Equipment Protection by Intrinsic Safety "i", UL 60079-11, and the Standard for Explosive Atmospheres – Part 0: General Requirements, UL 60079-0.

c) For Zone 20 and Zone 21 AEx hazardous (classified) locations: the Standard for Explosive Atmospheres - Part 11: Equipment Protection by Intrinsic Safety "i", UL 60079-11, and the Standard for Explosive Atmospheres – Part 0: General Requirements, UL 60079-0.

6.2 Barriers installed within an industrial control panel shall comply with the panel control drawing provided by the panel manufacturer and with the markings and barrier control drawing provided by the barrier manufacturer.

NOTE UL 120202 provides guidance in the preparation of control drawings for intrinsically safe apparatus, associated apparatus (such as barriers), and intrinsically safe systems.

6.3 One of the following means shall be used to limit the power to each barrier:

a) When the rated input voltage to the overall panel is greater than the rated Um of each barrier, the voltage to each barrier shall be supplied from an isolating source with an output voltage less than or equal to the rated Um of the barrier as specified on the barrier control drawing.

NOTE A single isolating source with an output voltage less than or equal to the rated Um of each barrier can be used to supply multiple barriers.

b) When the rated input voltage to the overall panel is less than or equal to the rated Um of each barrier, such a rated input voltage to the overall panel provides suitable limitation for each of the barriers within the panel.

6.4 A ground fault circuit interrupter shall not be used lieu of the requirements for the barrier as specified in this standard.

7 Selection of Apparatus for Connection to Intrinsically Safe Outputs

7.1 General

7.1.1 There are two types of apparatus that are permitted for selection and connection to the intrinsically safe outputs of the panel, either in the field or at the panel manufacturer's facility:

a) simple apparatus; and

b) intrinsically safe apparatus.

7.2 Suitability of simple apparatus to be determined in the field

7.2.1 When simple apparatus is not shipped with the panel, and the suitability is intended to be determined in the field, the following two scenarios apply:

Document Was Downloaded By Jon Parkinson For Use By Matrix Systems LLC Parkinson, Jon : 11/10/2022 - 1:51 PM

UL COPYRIGHTED MATERIAL – NOT AUTHORIZED FOR FURTHER REPRODUCTION OR DISTRIBUTION WITHOUT PERMISSION FROM UL INC.

a) If not indicated by a specific manufacturer and model number on the barrier control drawing, simple apparatus may be selected and connected in the field in accordance with the NEC.

b) If indicated by a specific manufacturer and model number on the barrier control drawing, the specified simple apparatus may be selected and connected in the field in accordance with the specification on the barrier control drawing.

7.2.2 For either of these selection scenarios, no additional details are required on the panel control drawing.

NOTE Simple apparatus that is supplied by barriers is permitted to be installed in hazardous (classified) locations based on 504.10(D) of the NEC®, including having appropriate electrical parameters or power dissipation as applicable.

7.3 Suitability of intrinsically safe apparatus to be determined in the field

7.3.1 When intrinsically safe apparatus is not shipped with the panel, and the suitability is intended to be determined in the field, the following two scenarios apply:

a) If not indicated by a specific manufacturer and model number on the barrier control drawing, intrinsically safe apparatus may be selected and connected in the field in accordance with the electrical (entity) parameters on the barrier control drawing.

b) If indicated by a specific manufacturer and model number on the barrier control drawing, the specified intrinsically safe apparatus may be selected and connected in the field in accordance with the specification on the barrier control drawing.

7.3.2 For either of these selection scenarios, no additional details are required on the panel control drawing.

7.4 Suitability of simple apparatus determined at the panel manufacturer's facility

7.4.1 When the suitability of simple apparatus is determined at the panel manufacturer's facility, whether shipped with the panel or not, the following two scenarios apply:

a) If indicated by a specific manufacturer and model number on the barrier control drawing, the specified simple apparatus may be selected at the panel manufacturer's facility in accordance with the specification on the barrier control drawing. For this scenario, no additional details are required on the panel control drawing.

b) If not indicated by a specific manufacturer and model number on the barrier control drawing, simple apparatus may be selected at the panel manufacturer's facility in accordance with 7.4.2 or 7.4.3 below. For this scenario, the selected simple apparatus shall be specified on the panel control drawing.

7.4.2 For barriers with an output power of 1.3 W or less, the requirements to indicate simple apparatus on the panel control drawing by a specific manufacturer and model number, along with indicating the temperature classification are as follows:

a) For switches intended to be used within their ratings and within a maximum ambient of 40°C, the temperature classification for such simple apparatus switches is assumed to be "T6".

b) For switches intended to be used within their ratings and within an ambient greater than 40°C and less than or equal to 80°C, the temperature classification for such simple apparatus switches is assumed to be "T4".

Document Was Downloaded By Jon Parkinson For Use By Matrix Systems LLC Parkinson, Jon : 11/10/2022 - 1:51 PM

UL COPYRIGHTED MATERIAL – NOT AUTHORIZED FOR FURTHER REPRODUCTION OR DISTRIBUTION WITHOUT PERMISSION FROM UL INC.

c) For simple apparatus other than switches, a temperature classification for the apparatus shall be determined in accordance with Table 7.1 (including its two Exceptions). The maximum surface temperature is calculated based on the following equation:

$$T = P_o R_{th} + T_{amb}$$

Where:

T is the Calculated maximum surface temperature;

P_o is the Output power, P_o of the barrier (see Note below);

NOTE If the Output power, P_o, of the barrier is not indicated on the barrier control drawing, it shall be determined by the following calculation:

$$P_o = (U_o \cdot I_o) \div 4$$

in which U_o (V_{oc}) and I_o (I_{sc}) are per the barrier control drawing.

R_{th} is the Thermal resistance of the simple apparatus (see simple apparatus datasheet); and

T_{amb} is the Maximum intended ambient temperature of the simple apparatus (normally 40°C).

Table 7.1
Temperature classification

Maximum surface temperature[a] °C	(°F)	Temperature classification
450	(842)	T1
300	(572)	T2
280	(536)	T2A[b]
260	(500)	T2B[b]
230	(446)	T2C[b]
215	(419)	T2D[b]
200	(392)	T3
180	(356)	T3A[b]
165	(329)	T3B[b]
160	(320)	T3C[b]
135	(275)	T4
120	(248)	T4A[b]
100	(212)	T5
85	(185)	T6

[a] Based on a 40°C (104°F) or intended higher ambient of the simple apparatus.
[b] Division 1 area applications only.

Exception No. 1: As an Exception to Table 7.1, the temperature classification of the simple apparatus may be indicated as "T5", if the calculated maximum surface temperature does not exceed 150°C (122°F), and if the surface area of the apparatus is smaller than 10 cm^2 (excluding lead wires).

UL COPYRIGHTED MATERIAL – NOT AUTHORIZED FOR FURTHER REPRODUCTION OR DISTRIBUTION WITHOUT PERMISSION FROM UL INC.

Document Was Downloaded By Jon Parkinson For Use By Matrix Systems LLC Parkinson, Jon : 11/10/2022 - 1:51 PM

Exception No. 2: As an Exception to Table 7.2, the temperature classification of the simple apparatus may be indicated as "T4", if one of the rows in Table 7.1 below applies.

Table 7.2
Criteria for "T4" temperature classification

Surface area of the simple apparatus (excluding lead wires)	Calculated maximum surface temperature or output power limitations
< 20 square mm	Calculated maximum surface temperature, T, ≤ 275°C (the simple apparatus cannot exceed a maximum intended ambient of 80°C)
≥ 20 square mm and ≤ 10 square cm	Calculated maximum surface temperature, T, ≤ 200°C (the simple apparatus cannot exceed a maximum intended ambient of 80°C)
≥ 20 square mm	Output power, P_o not exceeding: 1.3 W (40°C ambient of the simple apparatus) 1.2 W (60°C ambient of the simple apparatus) 1.0 W (80°C ambient of the simple apparatus)

7.4.3 If the output power of the barrier is greater than 1.3 W, then a simple apparatus can be indicated on the panel control drawing by a specific manufacturer and model number as follows:

a) When Division 1 hazardous (classified) locations is the intended area: The specified simple apparatus shall comply with the Standard for Intrinsically Safe Apparatus and Associated Apparatus for Use in Class I, II, and III, Division 1, Hazardous (Classified) Locations, UL 913.

b) When Zone 0 and Zone 1 AEx hazardous (classified) locations are the intended areas: The specified simple apparatus shall comply with the Standard for Explosive Atmospheres – Part 11: Equipment Protection by Intrinsic Safety "i", UL 60079-11, and the Standard for Explosive Atmospheres – Part 0: General requirements, UL 60079-0.

c) When Zone 20 and Zone 21 AEx hazardous (classified) locations are the intended areas: The specified simple apparatus shall comply with the Standard for Explosive Atmospheres – Part 11: Equipment Protection by Intrinsic Safety "i", UL 60079-11, and the Standard for Explosive Atmospheres – Part 0: General requirements, UL 60079-0.

7.5 Intrinsically safe apparatus selected at the panel manufacturer's facility

7.5.1 When the suitability of intrinsically safe apparatus is determined at the panel manufacturer's facility, whether shipped with the panel or not, the following two scenarios apply:

a) If indicated by a specific manufacturer and model number on the barrier control drawing, the specified intrinsically safe apparatus may be selected at the panel manufacturer's facility in accordance with the barrier control drawing. For this scenario, no additional details are required on the panel control drawing.

b) If not indicated by a specific manufacturer and model number on the barrier control drawing, intrinsically safe apparatus may be selected at the panel manufacturer's facility in accordance with 7.5.2 below. For this scenario, the selected intrinsically safe apparatus shall be specified on the panel control drawing.

7.5.2 When intrinsically safe apparatus is not indicated on the barrier control drawing by a specific manufacturer and model number, the requirements to indicate intrinsically safe apparatus on the panel control drawing by a specific manufacturer and model number are as follows:

Document Was Downloaded By Jon Parkinson For Use By Matrix Systems LLC Parkinson, Jon : 11/10/2022 - 1:51 PM

UL COPYRIGHTED MATERIAL – NOT AUTHORIZED FOR FURTHER REPRODUCTION OR DISTRIBUTION WITHOUT PERMISSION FROM UL INC.

a) When Division 1 hazardous (classified) locations is the intended area: The indicated intrinsically safe apparatus shall comply with the Standard for Intrinsically Safe Apparatus and Associated Apparatus for Use in Class I, II, and III, Division 1, Hazardous (Classified) Locations, UL 913.

b) When Zone 0 and Zone 1 AEx hazardous (classified) locations are the intended areas: The indicated intrinsically safe apparatus shall comply with the Standard for Explosive Atmospheres – Part 11: Equipment Protection by Intrinsic Safety "i", UL 60079-11, and the Standard for Explosive Atmospheres – Part 0: General Requirements, UL 60079-0.

c) When Zone 20 and Zone 21 AEx hazardous (classified) locations are the intended areas: The indicated intrinsically safe apparatus shall comply with the Standard for Explosive Atmospheres – Part 11: Equipment Protection by Intrinsic Safety "i", UL 60079-11, and the Standard for Explosive Atmospheres – Part 0: General Requirements, UL 60079-0.

d) When either Division or Zone AEx hazardous (classified) locations are the intended area: The electrical (entity) parameters on the barrier control drawing and on the specific intrinsically safe apparatus to be indicated on the panel control drawing shall conform with Table 7.3 below.

Table 7.3
Required relationship between I.S. apparatus and I.S. barrier entity parameters

I.S. apparatus entity parameters	Required relationship between entity parameters	I.S. barrier entity parameters
V max (or Ui)	≥	Voc or Vt (or Uo)
I max (or Ii)	≥	Isc or It (or Io)
P max (or Pi)	≥	Po
Ci + Ccable	≤	Ca (or Co)
Li + Lcable	≤	La (or Lo)

NOTE A descriptive system document in accordance with UL 60079-25 addresses items of electrical apparatus, their electrical parameters and those of the interconnecting wiring that are not specified on the barrier control drawing.

8 Additional Wiring and Wiring Terminal Requirements

8.1 General

8.1.1 Intrinsically safe factory or field wiring shall not be connected to a terminal block that also has non-intrinsically safe factory or field wiring terminations.

8.1.2 Either the field wiring terminals on the barrier or separate field wiring terminals can be provided as part of the panel for external interconnection of the intrinsically safe wiring. When separate field wiring terminals are provided for this purpose, the internal wiring between the barrier field wiring terminals and these separate field wiring terminals shall comply with the Standard for Appliance Wiring Material, UL 758. The separate field wiring terminals shall comply with the requirements for field wiring terminal blocks in the Standard for Industrial Control Panels, UL 508A.

8.2 Additional field wiring terminal requirements

8.2.1 Intrinsically safe field wiring terminals shall comply with the following:

a) A dedicated entry shall be provided in the overall panel enclosure for the entry of intrinsically safe field wiring for termination to the intrinsically safe field wiring terminals.

Document Was Downloaded By Jon Parkinson For Use By Matrix Systems LLC Parkinson, Jon : 11/10/2022 - 1:51 PM

UL COPYRIGHTED MATERIAL – NOT AUTHORIZED FOR FURTHER REPRODUCTION OR DISTRIBUTION WITHOUT PERMISSION FROM UL INC.

b) Intrinsically safe field wiring terminals for field wiring connection shall not be of the pluggable-type, unless part of the barrier.

8.2.2 Non-intrinsically safe field wiring terminals shall have dedicated entries provided in the overall panel enclosure for the entry of non-intrinsically safe field wiring.

9 Separation of Circuits

9.1 General

9.1.1 Separation between the following circuits shall be accomplished by positively maintaining specific distances between the circuits or by the use of partitions or by a combination of both methods:

• between intrinsically safe circuits, including wiring and terminals, and non-intrinsically safe circuits, including wiring and terminals; and

• between different intrinsically safe circuits, including their wiring and terminals.

9.2 Separation by distance

9.2.1 The following distances shall be measured considering movement of any internal electrical parts, including wiring, that are not positively secured:

a) The separation distance between intrinsically safe circuits, including wiring and terminals, and non-intrinsically safe circuits, including wiring and terminals, shall be a minimum of 50 mm (2 inches).

b) The separation distance between different intrinsically safe circuits shall be accomplished by:

1) a minimum of 6 mm (0.25 inch) between field wiring terminals of different intrinsically safe circuits; and

2) providing a minimum insulation thickness of 0.25 mm (0.01 inch) for all internal wiring of different intrinsically safe circuits.

NOTE Two examples of different intrinsically safe circuits are as follows:

1) circuits from two different barriers; and

2) multiple circuits from the same barrier, with the circuits defined by the barrier control drawing as being different circuits.

c) The separation distance between intrinsically safe terminals and ground or dead metal parts shall be a minimum of 3 mm (0.125 inch).

9.2.2 See Figure 9.1 for an example of the "Separation by Distance" method.

Document Was Downloaded By Jon Parkinson For Use By Matrix Systems LLC Parkinson, Jon : 11/10/2022 - 1:51 PM

UL COPYRIGHTED MATERIAL – NOT AUTHORIZED FOR FURTHER REPRODUCTION OR DISTRIBUTION WITHOUT PERMISSION FROM UL INC.

Figure 9.1

Separation by distance

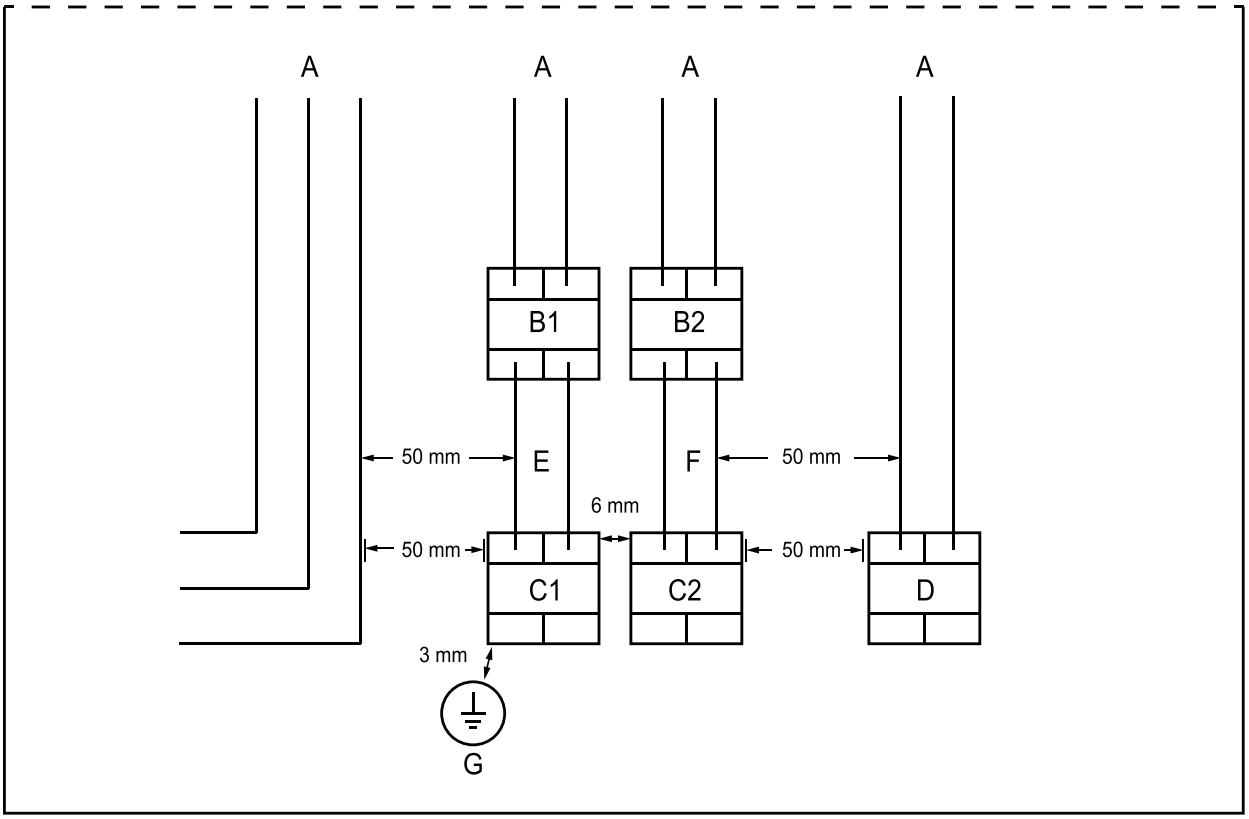

su3369

A. Non-intrinsically safe internal circuits, including wiring

B. Barriers

C. Intrinsically safe field wiring terminals

D. Non-intrinsically safe field wiring terminals

E. Intrinsically safe internal circuits, including wiring, different than F

F. Intrinsically safe internal circuits, including wiring, different than E

G. System ground

Document Was Downloaded By Jon Parkinson For Use By Matrix Systems LLC Parkinson, Jon : 11/10/2022 - 1:51 PM

UL COPYRIGHTED MATERIAL – NOT AUTHORIZED FOR FURTHER REPRODUCTION OR DISTRIBUTION WITHOUT PERMISSION FROM UL INC.

9.3 Separation by partitions

9.3.1 Partitions shall be made of metallic or non-metallic material and shall be mechanically secured in place, and shall comply with the following:

a) Where partitions are made of metallic material, they shall be a minimum of 0.45 mm (0.0177 inch) thick.

b) Where partitions are made of non-metallic material, they shall be a minimum of 0.9 mm (0.0354 inch) thick.

Metallic or non-metallic partitions may be less than the minimum thicknesses in 9.3.1 a) or b) respectively if they comply with Section 11, Mechanical Tests.

9.3.2 Partitions shall form a separate compartment and extend to within 1.5 mm (0.06 inch) of any enclosure wall, enclosure bottom, enclosure cover, or baseplate.

9.3.3 Partitions shall extend across each intrinsically safe barrier module to within 1.5 mm (0.06 inch) of all surfaces.

9.3.4 Metallic partitions shall be bonded to the equipment grounding system.

9.3.5 See Figure 9.2 for an example of the "Separation by Partitions" method.

Document Was Downloaded By Jon Parkinson For Use By Matrix Systems LLC Parkinson, Jon : 11/10/2022 - 1:51 PM

UL COPYRIGHTED MATERIAL – NOT AUTHORIZED FOR FURTHER REPRODUCTION OR DISTRIBUTION WITHOUT PERMISSION FROM UL INC.

Figure 9.2

Separation by partitions

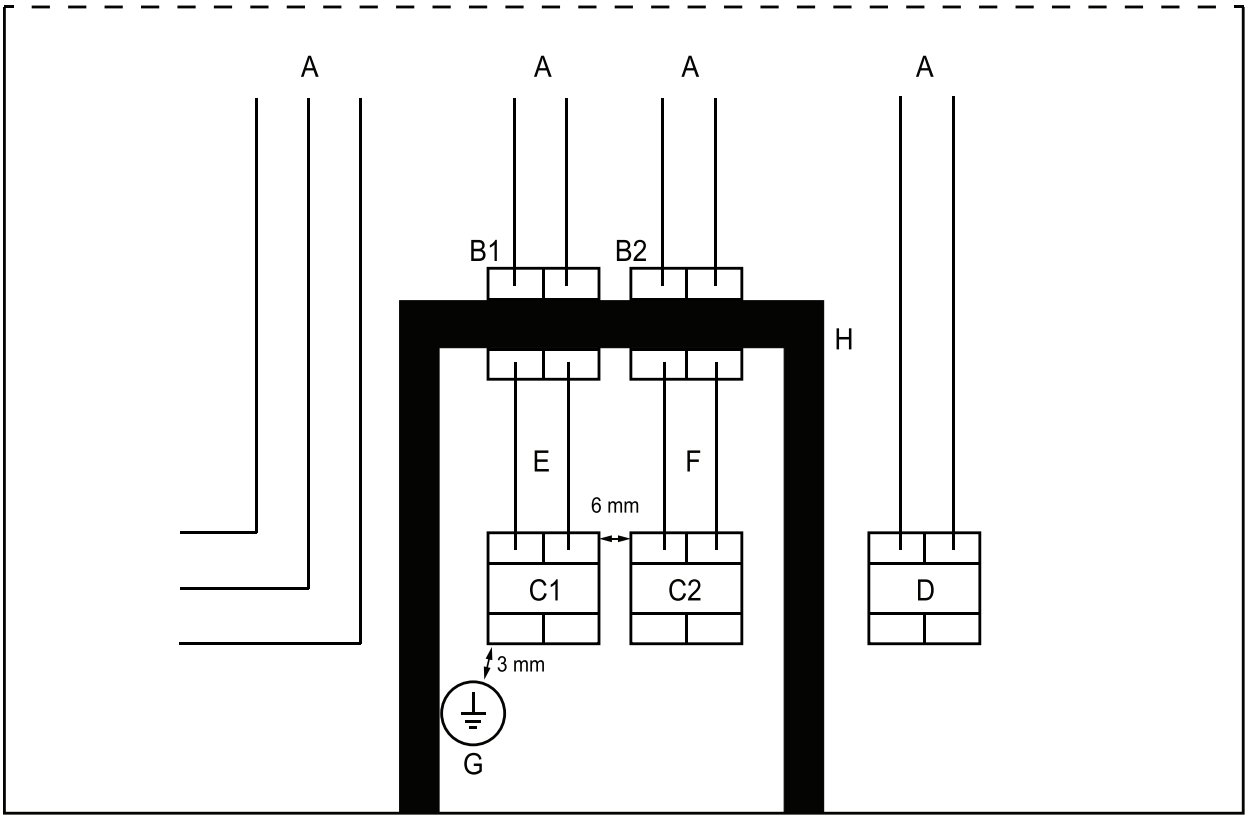

su3370

A. Non-intrinsically safe internal circuits, including wiring

B. Barriers

C. Intrinsically safe field wiring terminals

D. Non-intrinsically safe field wiring terminals

E. Intrinsically safe internal circuits, including wiring, different than F

F. Intrinsically safe internal circuits, including wiring, different than E

G. System ground

H. Partition

Document Was Downloaded By Jon Parkinson For Use By Matrix Systems LLC Parkinson, Jon : 11/10/2022 - 1:51 PM

UL COPYRIGHTED MATERIAL – NOT AUTHORIZED FOR FURTHER REPRODUCTION OR DISTRIBUTION WITHOUT PERMISSION FROM UL INC.

9.4 Combination of separation by partitions and separation by distance

9.4.1 Where the "Separation by partitions" method is used, but the partitions do not extend to within 1.5 mm (0.06 inch) of an enclosure wall, enclosure bottom, enclosure cover, or baseplate, the "Separation by distance" method may be applied by measuring the shortest distance around the partition.

9.4.2 See Figure 9.3 for an example of the "Combination of separation by partitions and separation by distance" method.

Figure 9.3

Combination of separation by partitions and separation by distance

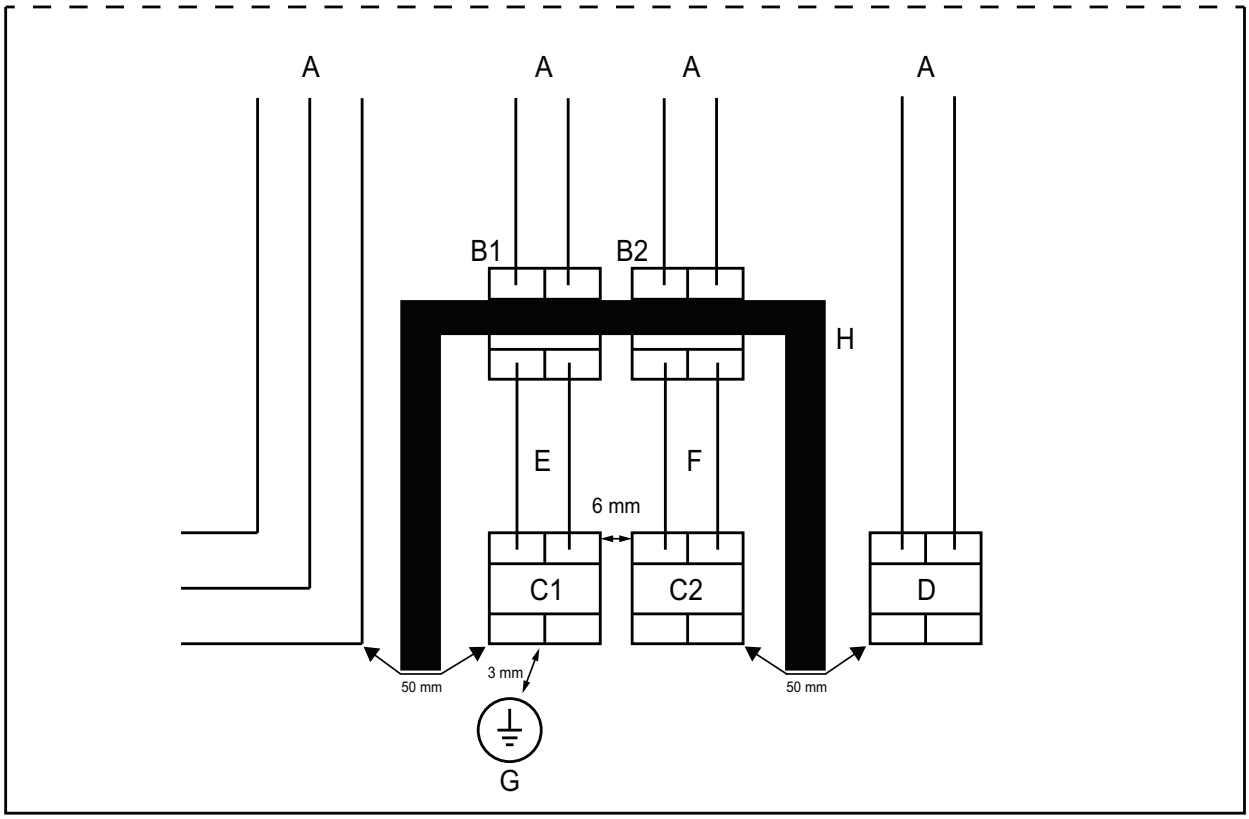

su3370a

A. Non-intrinsically safe internal circuits, including wiring

B. Barriers

C. Intrinsically safe field wiring terminals

D. Non-intrinsically safe field wiring terminals

E. Intrinsically safe internal circuits, including wiring, different than F

F. Intrinsically safe internal circuits, including wiring, different than E

G. System ground

H. Partition

Document Was Downloaded By Jon Parkinson For Use By Matrix Systems LLC Parkinson, Jon : 11/10/2022 - 1:51 PM

UL COPYRIGHTED MATERIAL – NOT AUTHORIZED FOR FURTHER REPRODUCTION OR DISTRIBUTION WITHOUT PERMISSION FROM UL INC.

10 Barrier Ground Terminal

10.1 When required by the barrier control drawing, the ground terminal dedicated to the intrinsically safe barrier shall be bonded to the equipment grounding system of the panel.

PERFORMANCE

11 Mechanical Tests

11.1 Metallic or non-metallic partitions less than the minimum required values are to be subjected to a force of (30 -0/+3) Newtons (6.75 -0/+0.67) lbs-force, applied by a flat ended (6 ±0.2) mm (0.25 ±0.008) inch diameter rigid test rod.

11.2 The force is to be applied at the center of the partition for at least 10 seconds.

11.3 There shall be no permanent deformation of the partition that defeats its purpose.

MARKINGS

12 Internal Markings

12.1 The following, or equivalent, shall be marked internally within each panel enclosure:

a) Intrinsically safe field wiring terminals in the intrinsically safe area of the panel shall be marked "Intrinsically Safe Field Wiring Terminals".

b) The word "WARNING" and the following, "Explosion Hazard – Substitution of Components May Impair Intrinsic Safety" shall be placed on the intrinsically safe area of the panel.

c) Where an internal transformer is relied upon to provide the required Um to the barrier (see 6.3), the marking in 12.1(b) shall be placed adjacent to the transformer.

13 External Markings

13.1 The following, or equivalent, shall be marked externally on each panel enclosure in a manner that is intended to be visible after the panel is installed:

a) Intrinsically safe field wiring outputs shall be marked "Intrinsically Safe Circuits". This marking shall be adjacent to the intended wiring openings.

b) The panel shall be marked "Provides intrinsically safe circuit extensions for use in Hazardous Locations when connected per Panel Control Drawing No. ___."

c) The word "WARNING" and the following, "Explosion Hazard. To prevent ignition of flammable or combustible atmospheres, disconnect power before servicing".

PANEL DOCUMENTATION

14 General

14.1 The documentation for each panel shall include:

a) installation instructions;

b) a panel control drawing; and

Document Was Downloaded By Jon Parkinson For Use By Matrix Systems LLC Parkinson, Jon : 11/10/2022 - 1:51 PM

UL COPYRIGHTED MATERIAL – NOT AUTHORIZED FOR FURTHER REPRODUCTION OR DISTRIBUTION WITHOUT PERMISSION FROM UL INC.

c) a copy of each barrier control drawing.

14.2 If intrinsically safe apparatus are shipped with the panel for field connection, a copy of the control drawing for each apparatus is also included.

15 Panel Control Drawing

15.1 Each panel control drawing shall contain the following content:

a) Clear identification of the intrinsically safe field wiring terminals for external interconnection in the field, along with a clear indication of the associated barrier control drawing for each terminal.

b) The following statement, “See the control drawing for each intrinsic safety barrier for permitted connections and identification of the electrical (entity) parameters of each barrier, along with other information for safe interconnection”, or equivalent.

c) A clear delineation between the hazardous (classified) location portion and the unclassified location portion of the drawings, such as by a dashed line with the text “Hazardous Area” or “Classified Location” on one side of the dashed line, and “Non-Hazardous Area” or “Unclassified Location” on the other.

d) An indication of the area classification into which the intrinsically safe circuit extensions from the barriers are permitted to extend, such as by providing the text "Class I, Division 1, Groups A, B, C, D" or "Class I, Zone 0 AEx Group IIC" as applicable beneath the "Hazardous Area" text.

e) The following statement, "Install in accordance with the National Electrical Code (NEC®), and any applicable local codes", or equivalent.

f) If specific intrinsically safe apparatus is to be indicated on the panel control drawing, the following shall be included:

1) The manufacturer and model of the intrinsically safe apparatus.

2) Reference to the control drawing for the intrinsically safe apparatus.

3) Clear identification of the intrinsically safe field wiring terminals on the panel to which the intrinsically safe field wiring terminals of the intrinsically safe apparatus are to be connected.

4) The maximum length of cable that may be used to interconnect the intrinsically safe apparatus with the panel.

5) (When the specific intrinsically apparatus is not shipped with the panel). The electrical (entity) parameters of the selected intrinsically safe apparatus.

NOTE It is not an option to generically indicate intrinsically safe apparatus on the panel control drawing.

g) If simple apparatus is to be indicated on the panel control drawing, with or without a manufacturer and model number being specified, the following shall be included:

1) (When specific simple apparatus is to be indicated). The manufacturer and model of the simple apparatus.

2) Clear identification of the intrinsically safe field wiring terminals on the panel to which the intrinsically safe field wiring terminals of the simple apparatus are to be connected.

3) The maximum length of cable that may be used to interconnect the apparatus with the panel.

Document Was Downloaded By Jon Parkinson For Use By Matrix Systems LLC Parkinson, Jon : 11/10/2022 - 1:51 PM

UL COPYRIGHTED MATERIAL – NOT AUTHORIZED FOR FURTHER REPRODUCTION OR DISTRIBUTION WITHOUT PERMISSION FROM UL INC.

4) The maximum intended ambient for the simple apparatus if greater than 40°C.

5) A statement that reads, "For connecting only to purely resistive, non-energy storing devices", or the equivalent.

15.2 The following are some typical examples of Division 1 panel control drawings:

a) For an example of a panel control drawing indicating specific intrinsically safe apparatus, refer to Figure 15.1.

b) For an example of a panel control drawing indicating specific simple apparatus, refer to Figure 15.2.

c) For an example of a panel control drawing indicating non-specific simple apparatus, refer to Figure 15.3.

NOTE 1: For a typical example of a Zone 0 or Zone 1 AEx panel drawing, the reference to "Art. 504" in the example would be replaced with "Art. 505" and the reference to "Class I, Groups A, B, C and D" would be replaced with "Class I, Zone 0, AEx Group IIC" or "Class I, Zone 1, AEx Group IIC" respectively.

NOTE 2: For a typical example of a Zone 20 or Zone 21 AEx panel drawing, the reference to "Art. 504" in the example would be replaced with "Art. 506" and the reference to "Class I, Groups A, B, C and D" would be replaced with "Zone 20, AEx Group IIIC" or "Zone 21, AEx Group IIIC" respectively.

Document Was Downloaded By Jon Parkinson For Use By Matrix Systems LLC Parkinson, Jon : 11/10/2022 - 1:51 PM

UL COPYRIGHTED MATERIAL – NOT AUTHORIZED FOR FURTHER REPRODUCTION OR DISTRIBUTION WITHOUT PERMISSION FROM UL INC.

Figure 15.1

Panel control drawing indicating specific intrinsically safe apparatus

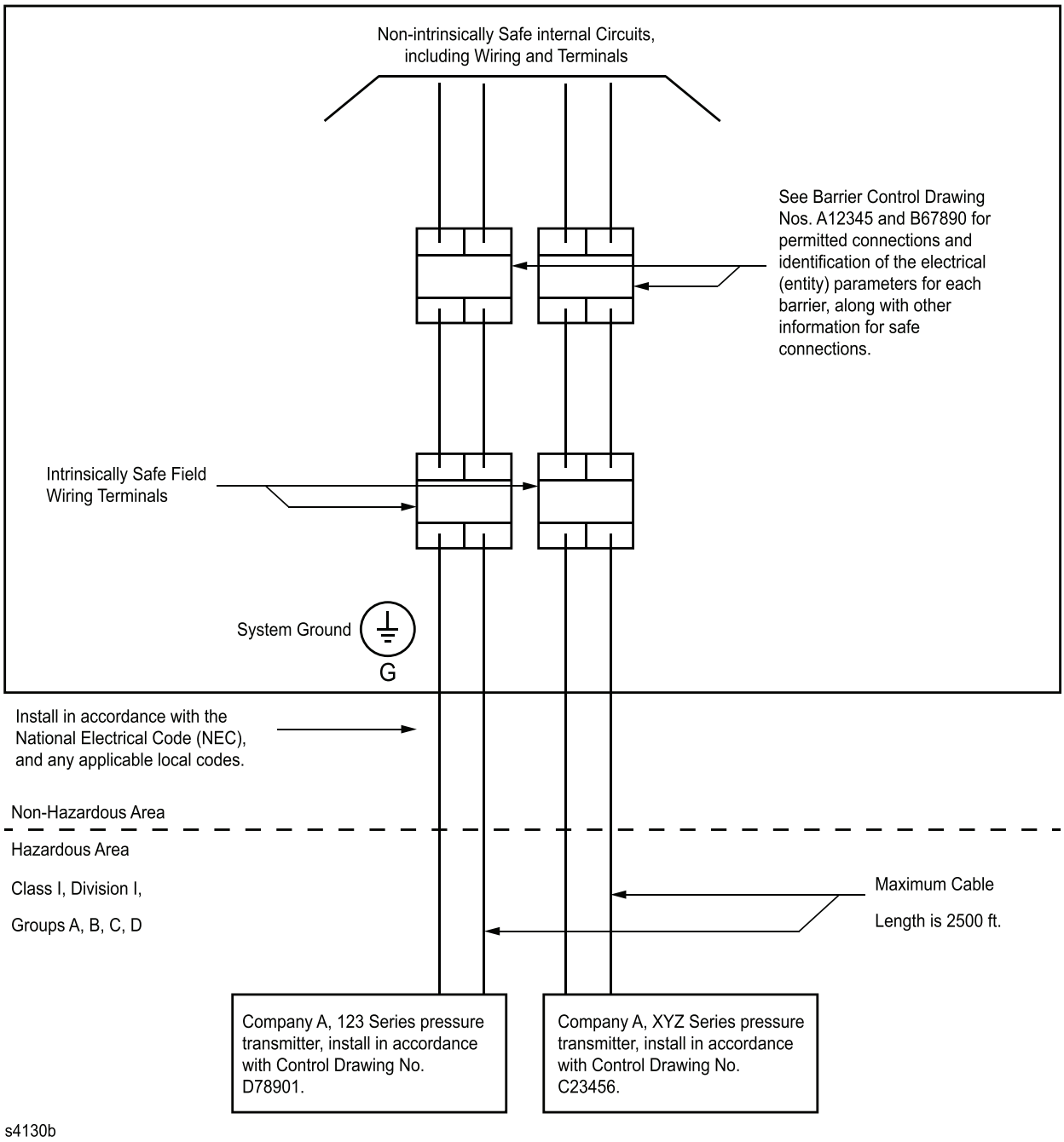

s4130b

Document Was Downloaded By Jon Parkinson For Use By Matrix Systems LLC Parkinson, Jon : 11/10/2022 - 1:51 PM

UL COPYRIGHTED MATERIAL – NOT AUTHORIZED FOR FURTHER REPRODUCTION OR DISTRIBUTION WITHOUT PERMISSION FROM UL INC.

Figure 15.2

Panel control drawing indicating specific simple apparatus

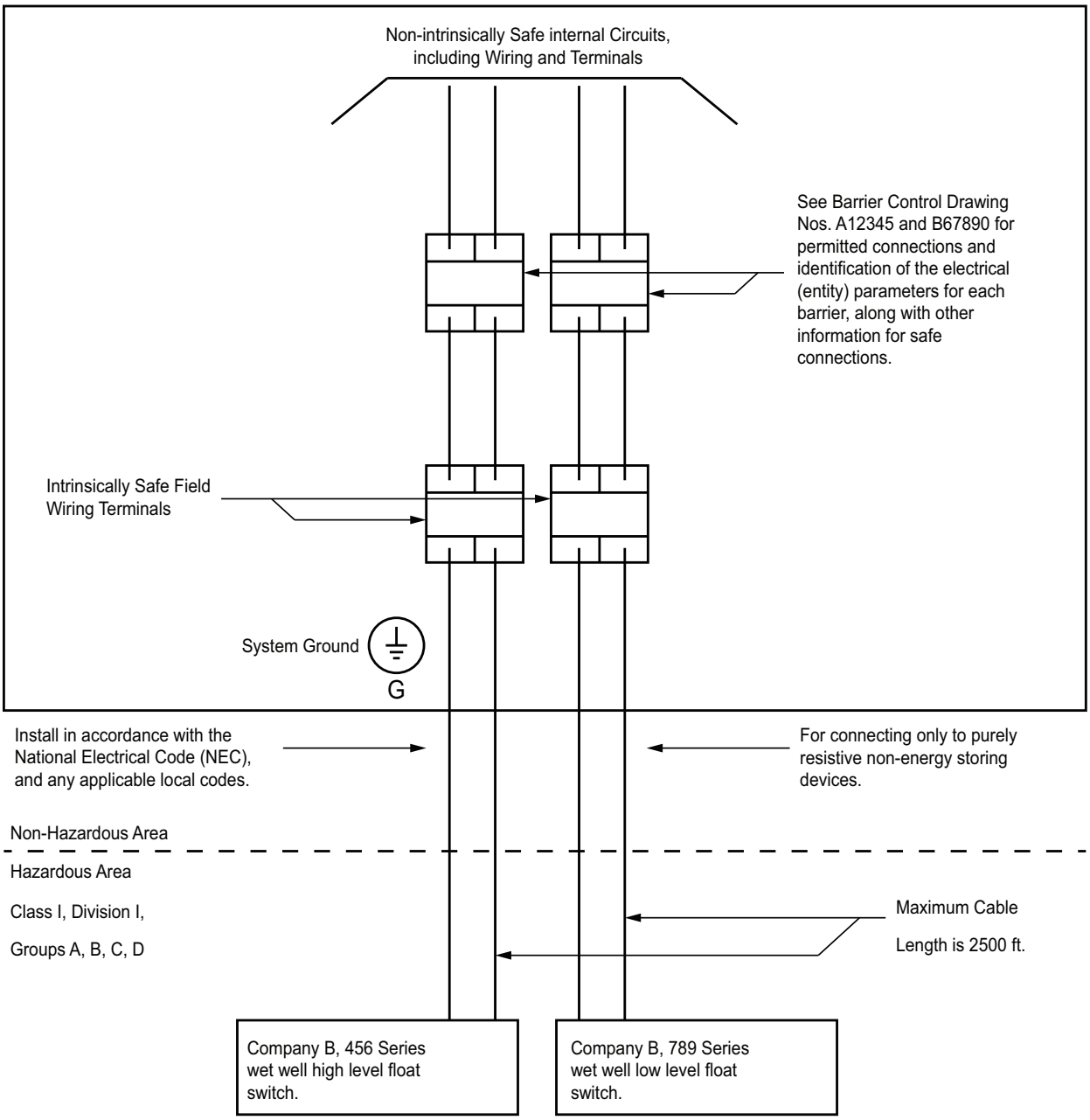

s4130c

Document Was Downloaded By Jon Parkinson For Use By Matrix Systems LLC Parkinson, Jon : 11/10/2022 - 1:51 PM

UL COPYRIGHTED MATERIAL – NOT AUTHORIZED FOR FURTHER REPRODUCTION OR DISTRIBUTION WITHOUT PERMISSION FROM UL INC.

Figure 15.3

Panel control drawing indicating non-specific simple apparatus

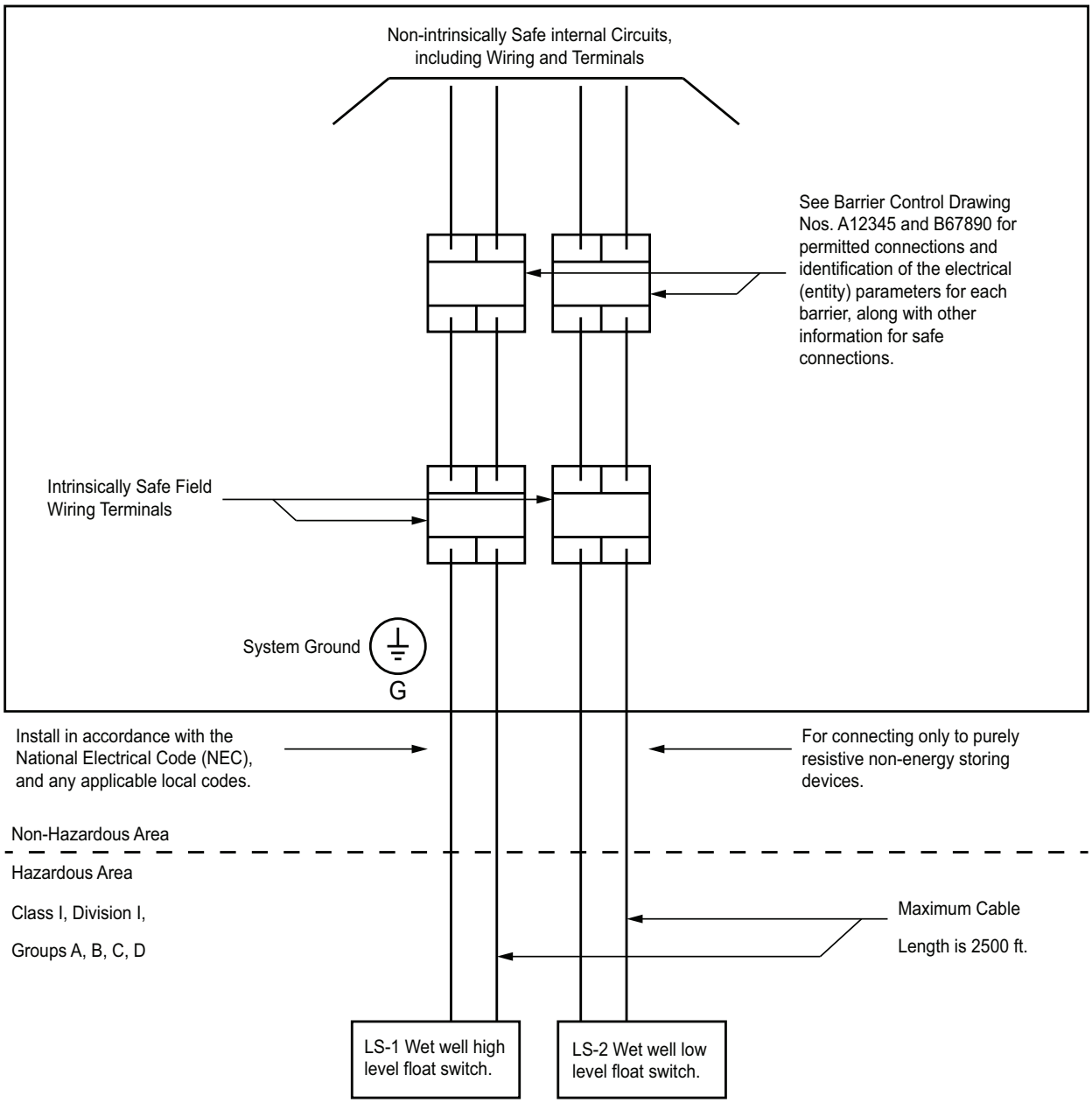

s4130d

Document Was Downloaded By Jon Parkinson For Use By Matrix Systems LLC Parkinson, Jon : 11/10/2022 - 1:51 PM

UL COPYRIGHTED MATERIAL – NOT AUTHORIZED FOR FURTHER REPRODUCTION OR DISTRIBUTION WITHOUT PERMISSION FROM UL INC.

333 Pfingsten Road
Northbrook, Illinois 60062–2096
847.272.8800

For other locations in the UL family of companies,
please visit UL.com/contact

Document Was Downloaded By Jon Parkinson For Use By Matrix Systems LLC Parkinson, Jon : 11/10/2022 - 1:51 PM